gmi technology for safety

TB-D5016 YOK-004

Termination Board 16+16 positions for Yokogawa Centum VP with Digital Input card ADV151 and ADV161

Characteristics:

General description:

This Termination Board (TB) provides direct connection between the I/O Card of the system and D5000 Series modules. The Intrinsically Safe protection and signal isolation between Safe and Hazardous Area is provided by D5000 Series Associated Apparatus. The 24 Vdc Power Supply of the TB is connected to two plug-in terminal blocks, for a redundant power supply. The power supply for modules is given by TB power bus.

Termination Board general characteristics:

Termination Board Model	*Number of positions*	*Features*
TB-D5016-YOK-004	16 (1st TB) + 16 (2nd TB)	1) I/O Card redundancy; 2) Power Supply voltage redundancy; 3) Abnormal supply voltage signaling; 4) Cumulative module fault signaling.

Supported Yokogawa Centum VP I/O Cards:

I/O Card Model	*I/O Card Type*	*Number of channels per I/O Card*	*Number of I/O Cards per board*	*Number of channels per board*	*Supported GM Modules*
ADV151	Digital In	32	1+(1)*	16 (1st TB) + 16 (2nd TB)	D5031S D5032S
ADV161		64	1/2+(1/2)**	16 (1st TB) + 16 (2nd TB	

** with possibility of I/O Card redundancy.*
*** with possibility of I/O Card redundancy; two TB-D5016-YOK-004 boards are necessary to provide 64 channels to I/O card (32 channels each)*

Technical Data:

Supply:

24 Vdc nom (20 to 30 Vdc) reverse polarity protected, double terminal blocks for redundant power supply, with OR diodes to mix supply voltages.
Connection: by polarized plug-in disconnect screw terminal blocks to accommodate terminations up to 2.5 mm^2.
Protection fuse: 4 A slow blow (spare fuse provided on Termination Board).

Fault detection: (for more information see Fault Logic section)

Abnormal supply voltages <u>or</u> module cumulative fault: PWR 1 or PWR 2 is in under (< 18 Vdc) or over (> 30 Vdc) voltage condition <u>*OR*</u> module cumulative fault indication.
Relay fault signaling: a voltage free NE SPST-1 Form A relay contact (de-energized in fault condition), with the following characteristics:
Contact material: AgCdO.
Contact rating: 2 A 36 Vac 72 VA, 2 A 48 Vdc 80 W (resistive load).
Mechanical / Electrical life: 30 * 10^6 / 1 * 10^5 operation, typical.
Connection: by polarized plug-in disconnect screw terminal blocks to accommodate terminations up to 2.5 mm^2.
LED fault signaling: 1 green LED (PWR 1 OK); 1 green LED (PWR 2 OK); 1 red LED (UV or OV of PWR 1); 1 red LED (UV or OV of PWR 2); a cumulative fault red LED.

Centum VP I/O card interface:

Connection: two 50 poles male connectors (require female mating connectors).

Field signal:

Connection: directly to module by polarized plug-in disconnect screw terminal blocks to accommodate terminations up to 2.5 mm^2.

Environmental conditions:

Operating: temperature limits – 40 to + 70 °C,
relative humidity max 90 % non condensing, up to 35 °C.
Storage: temperature limits – 45 to + 80 °C.

Mounting:

Hardware included for mounting on wall and single DIN rail.
Flat ribbon 34-poles cable included for PCB connection.
Weight: about 800 g (excluding modules and mounting options).
Location: Safe Area / Ordinary locations.
Dimensions: Width 534 mm, Depth 176 mm, Height 125 mm.

Features:

- DI card type ADV151 (32 channels) Digital Input board interface.
- DI card type ADV161 (64 channels) Digital Input board interface.
- 16 + 16 positions Termination Board for up to 32 channels.
- Lower cables installation and maintenance costs.
- Power supplies fault monitoring.
- Spare fuse provided.
- Mounting hardware provided for:
  - Single Din Rail mounting kit;
  - Wall mounting, M4 self tapping screw;
  - Wall mounting, M4 thread screw.

Image:

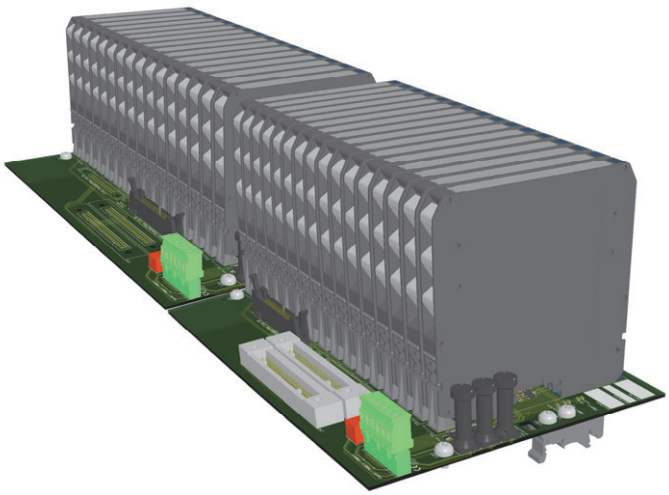

Ordering Information:

Model: TB-D5016-YOK-004

Loop Diagrams for Centum VP ADV151 (32 DI) Interface Card:

HAZARDOUS AREA | SAFE AREA

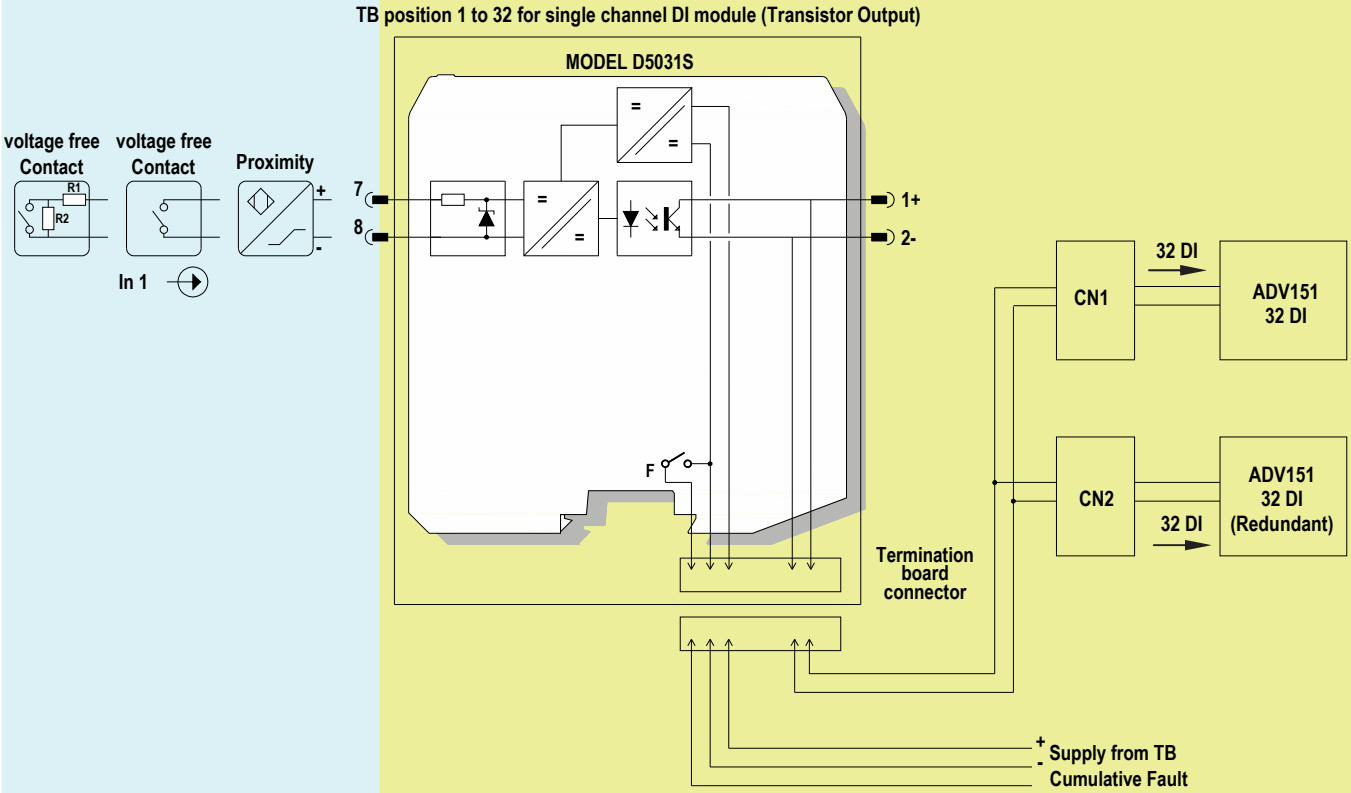

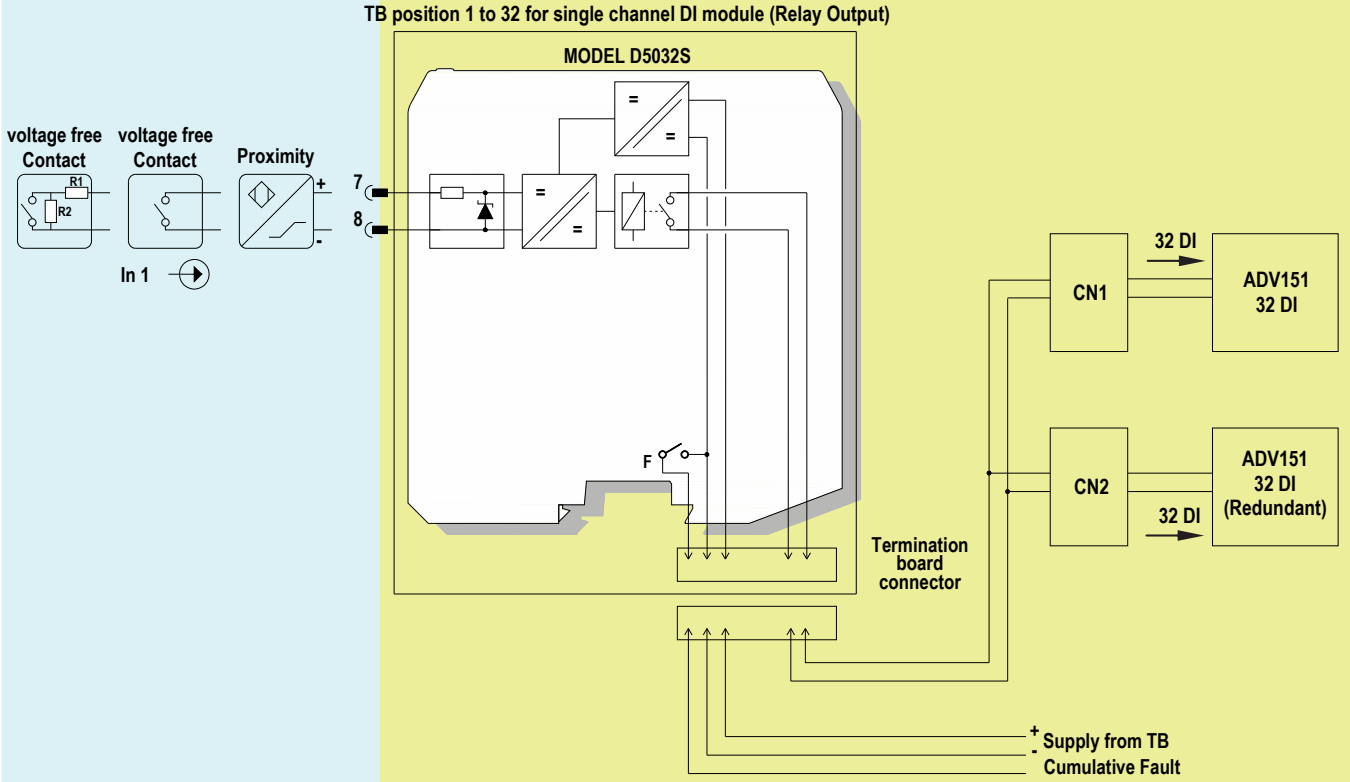

Loop Diagrams for Centum VP ADV161 (64 DI) Interface Card:

HAZARDOUS AREA | SAFE AREA

TB position 1 to 32 for single channel DI module (Transistor Output)

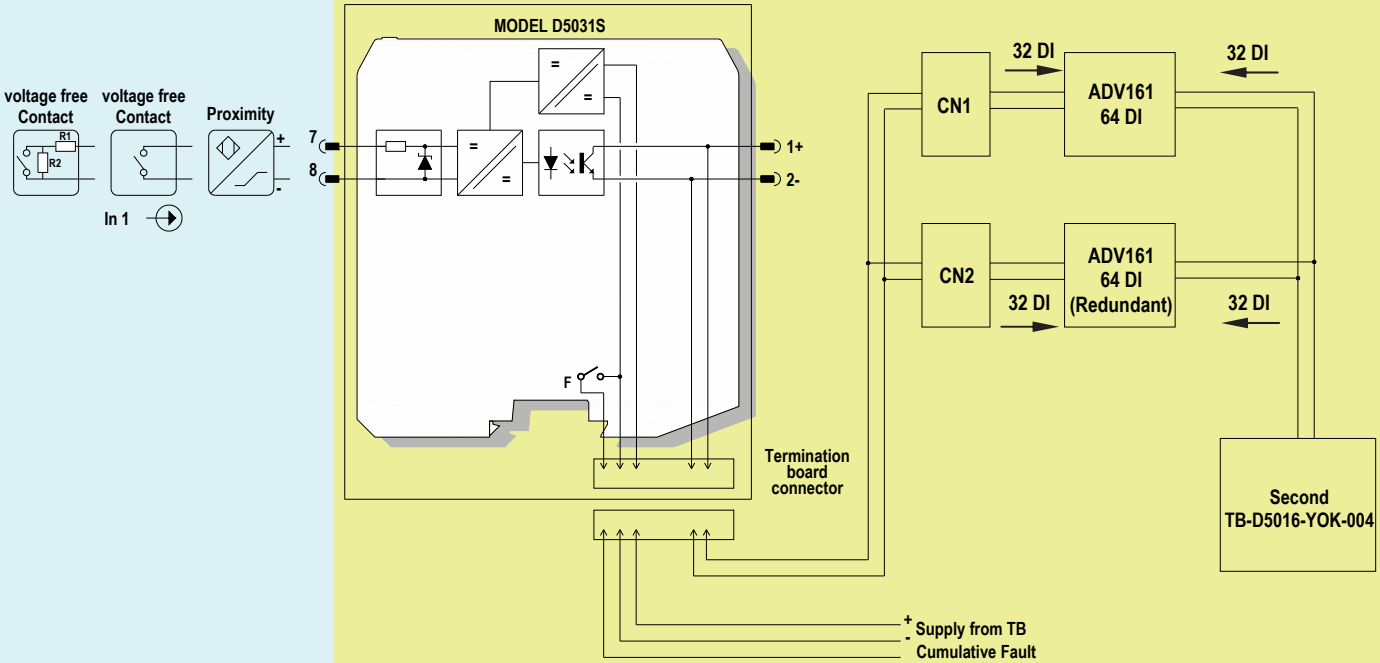

TB position 1 to 32 for single channel DI module (Relay Output)

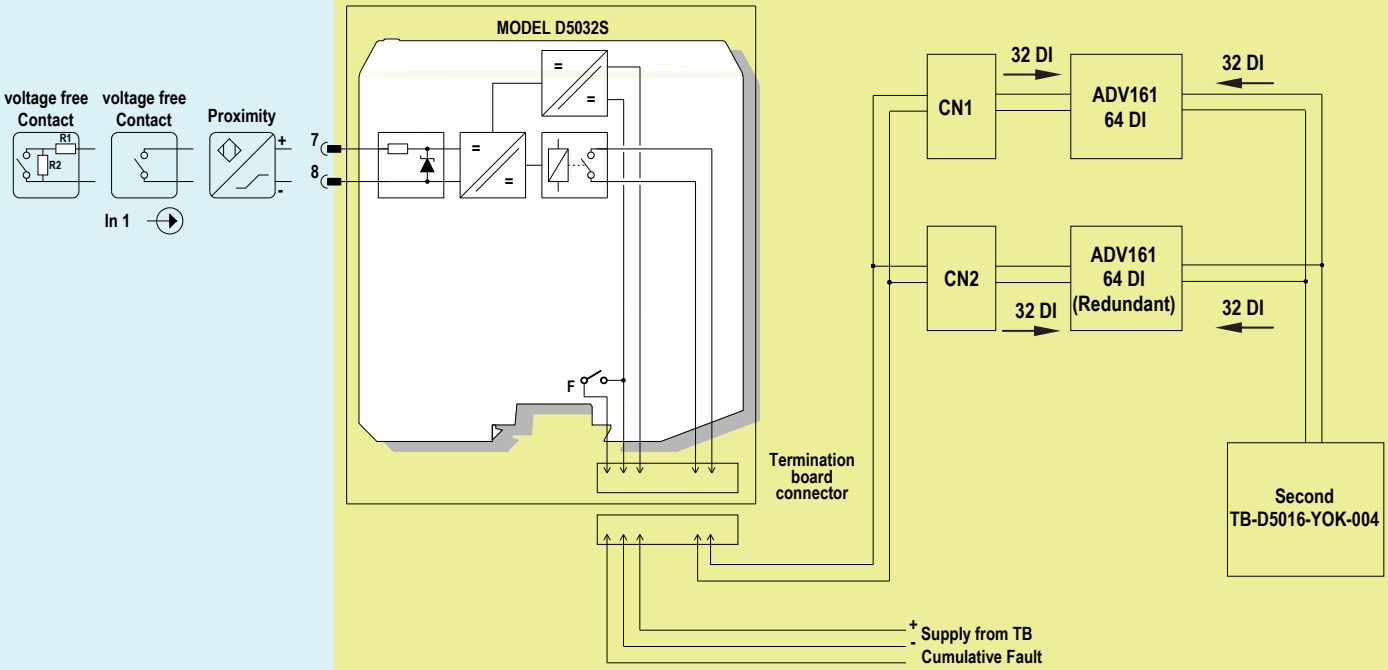

Termination Board Description:

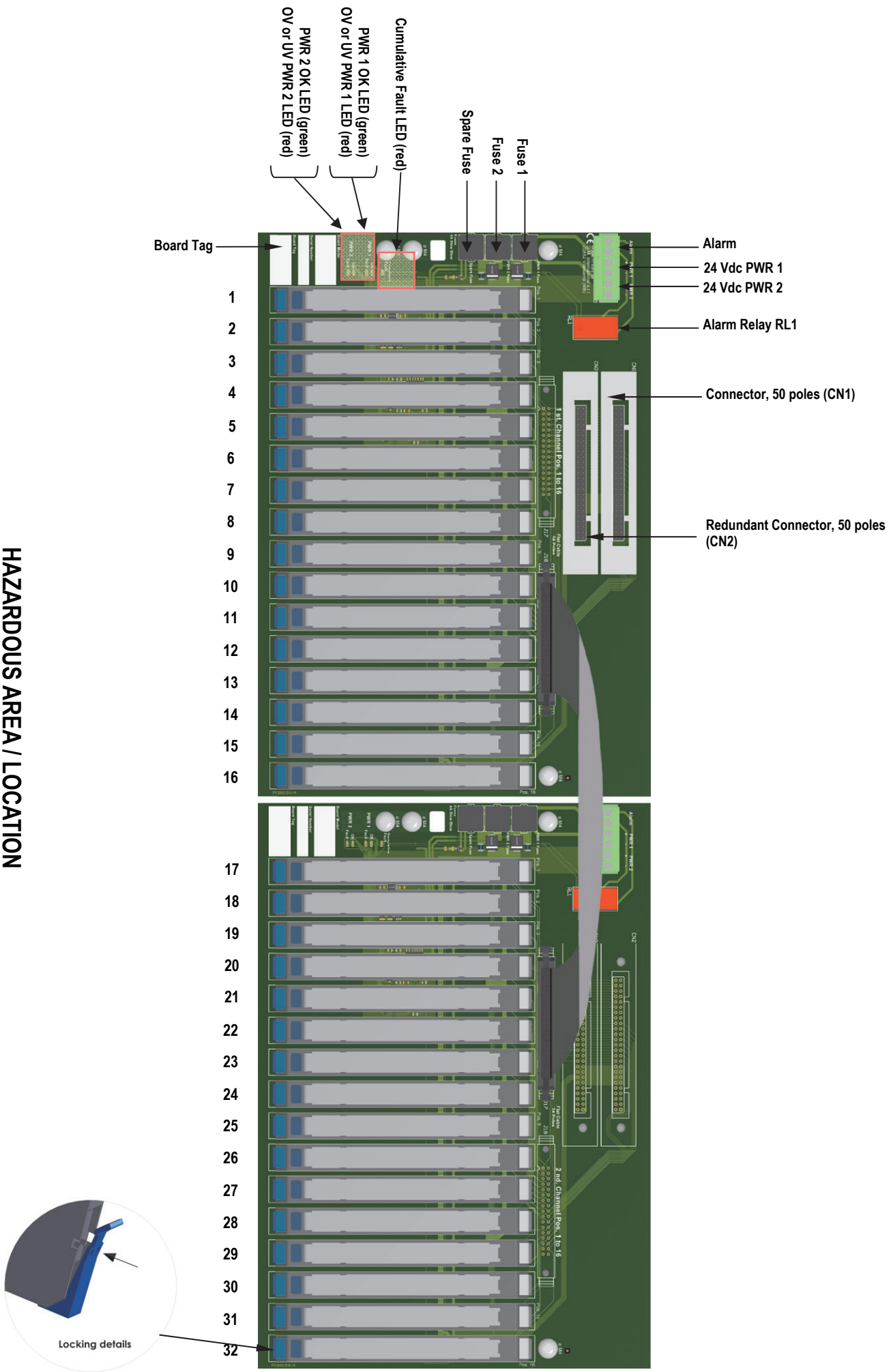

Termination Board Fault Logic:

LED Signaling:
Meaning of LEDs on termination boards:

TAG	LED COLOR	MEANING
PWR 1 OK	GREEN	The LED is on when PWR 1 is within the regular range (>18 V and <30 V).
PWR 1 Over or Under V	RED	The LED is on when PWR 1 is in over-voltage (>30V) or under-voltage (<18 V).
PWR 2 OK	GREEN	The LED is on when PWR 2 is within the regular range (>18 V and <30 V).
PWR 2 Over or Under V	RED	The LED is on when PWR 2 is in over-voltage (>30V) or under-voltage (<18 V).
Cumulative Fault	RED	The LED is on when at least one module / barrier reported a fault.

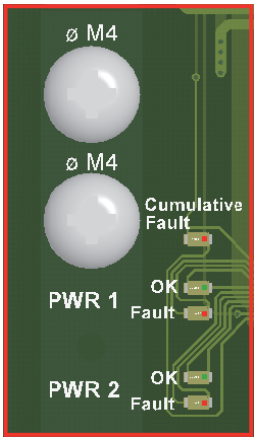

Relay Activation Conditions:
The two relays are activated according to the following rules:

TAG	ACTIVATION
ALARM	The relay is energized when the following two conditions hold: 1. both supply voltages are within the regular range (>18 V and <30 V). 2. No module / barrier fault is reported.

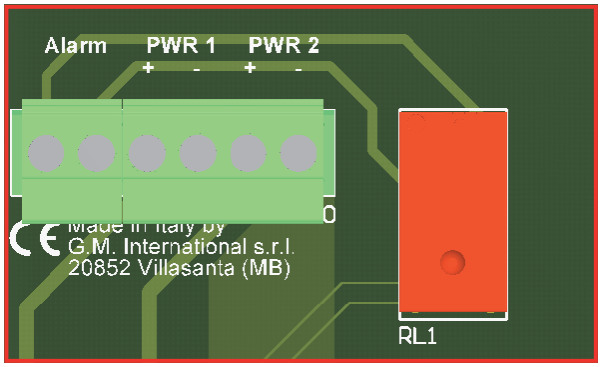

Termination Board Connection Diagram fr Centum VP ADV151 (32 DI) Interface Card:

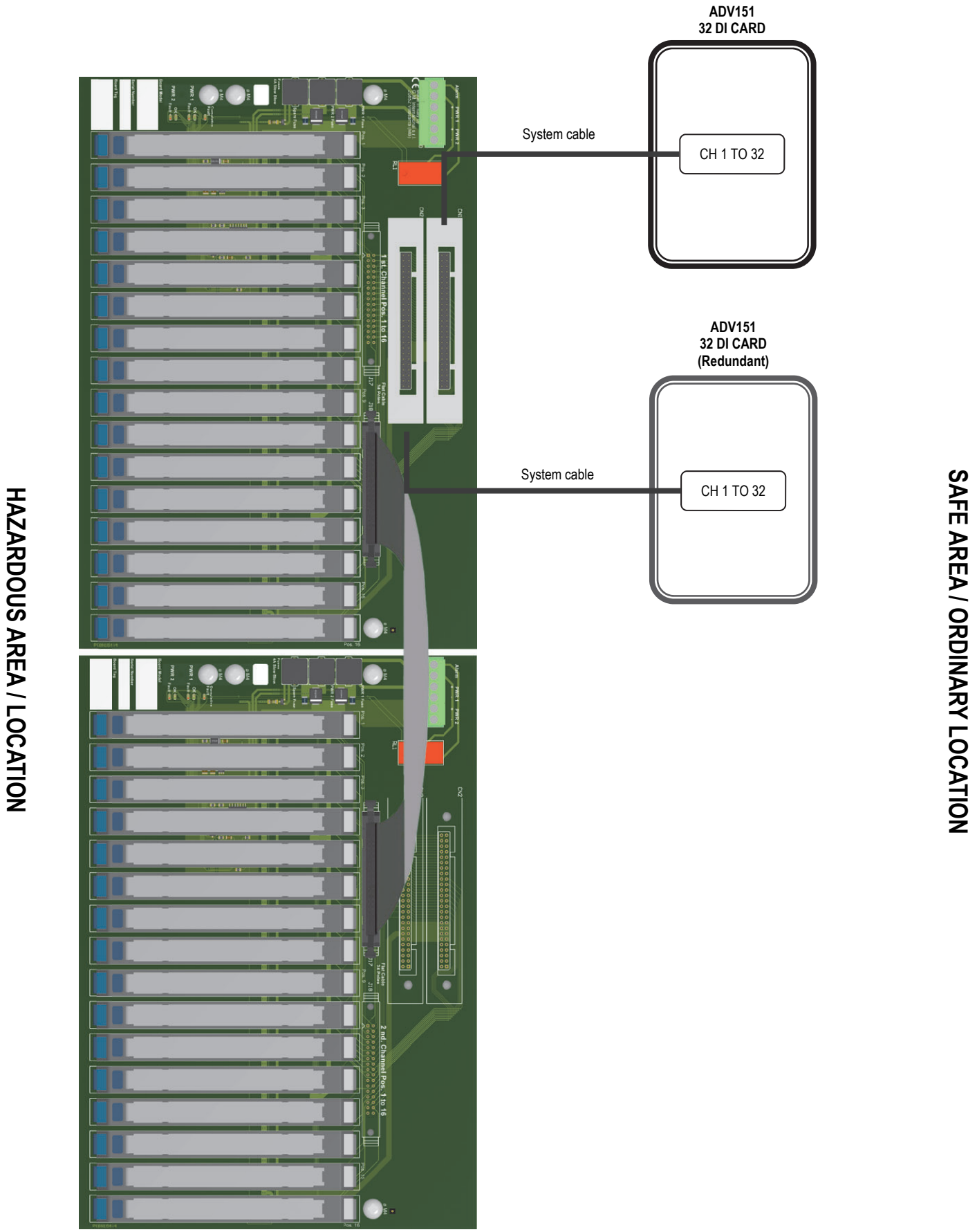

Termination Board Connection Diagram fr Centum VP ADV161 (64 DI) Interface Card:

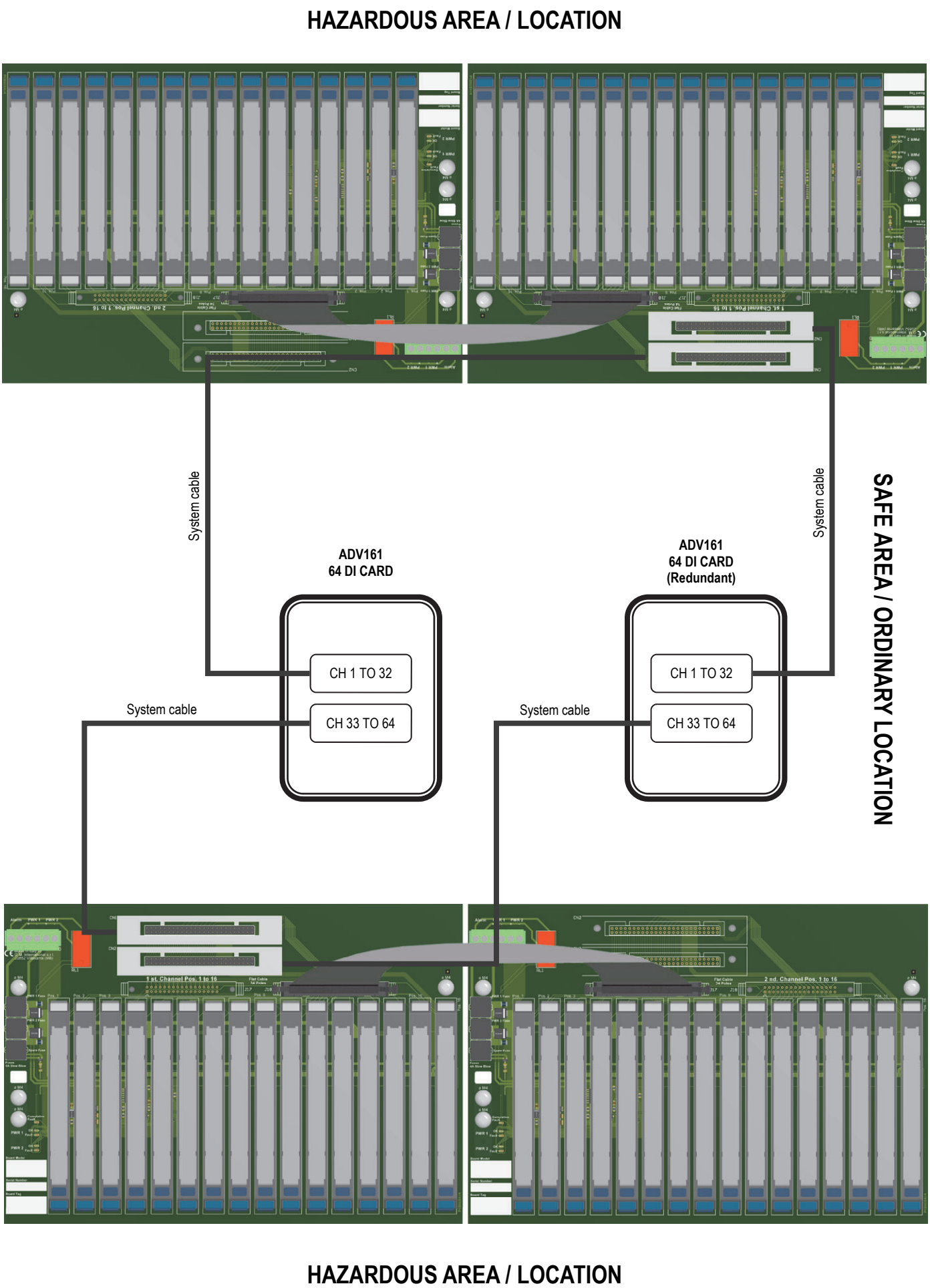

DIN Rail mounting and overall dimensions:

Bottom view

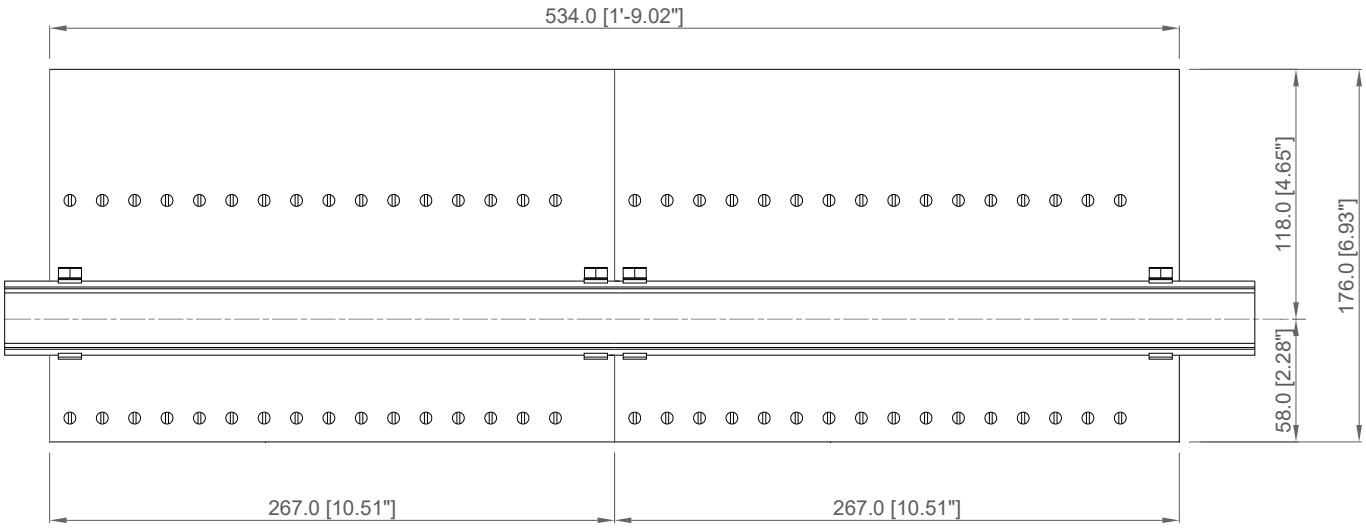

Side view

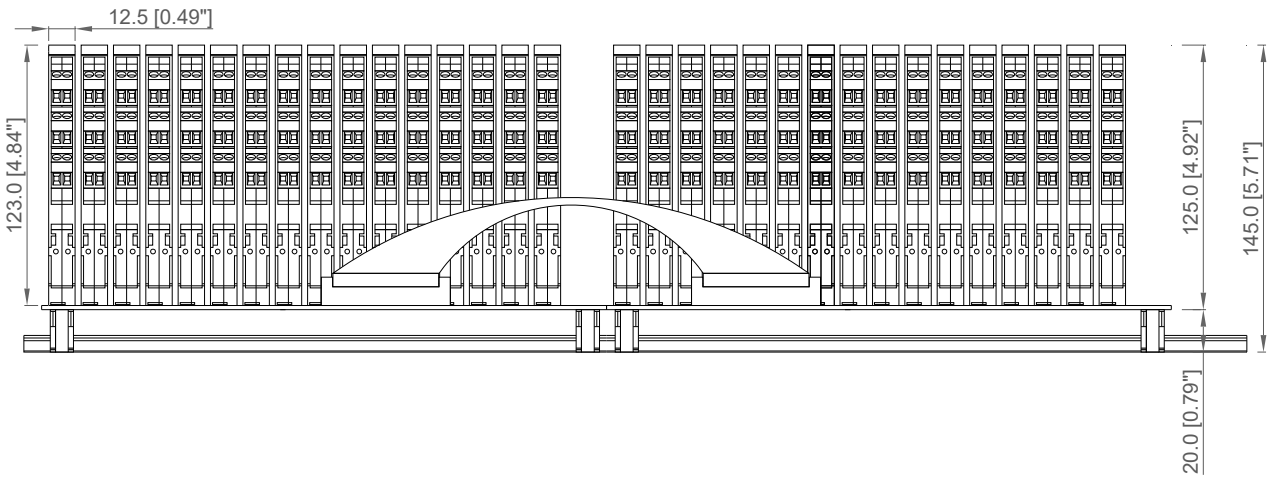

All dimensions are expressed in millimeters [inches]

DIN Rail mounting features:

Mounting features kit TB-OPT-001 (2x)

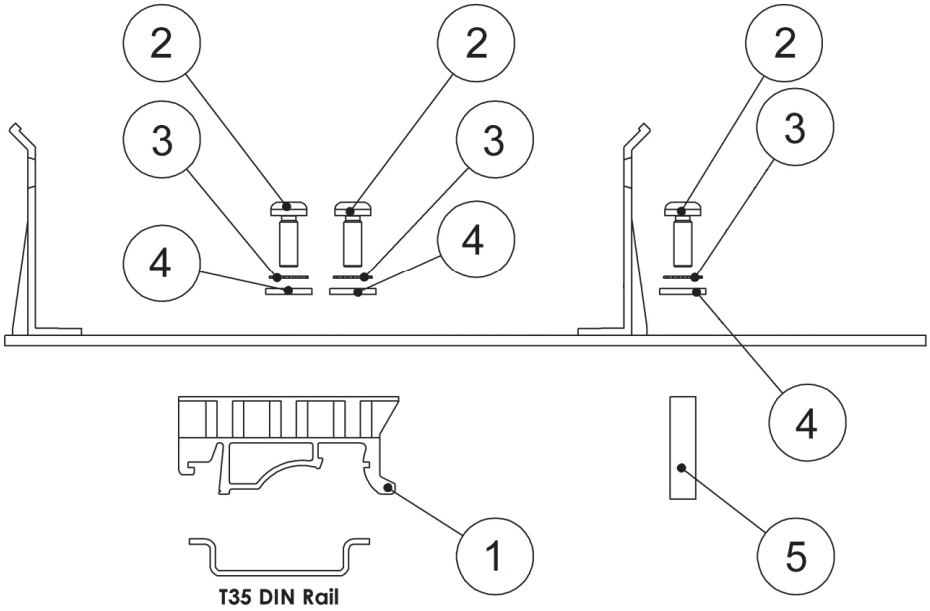

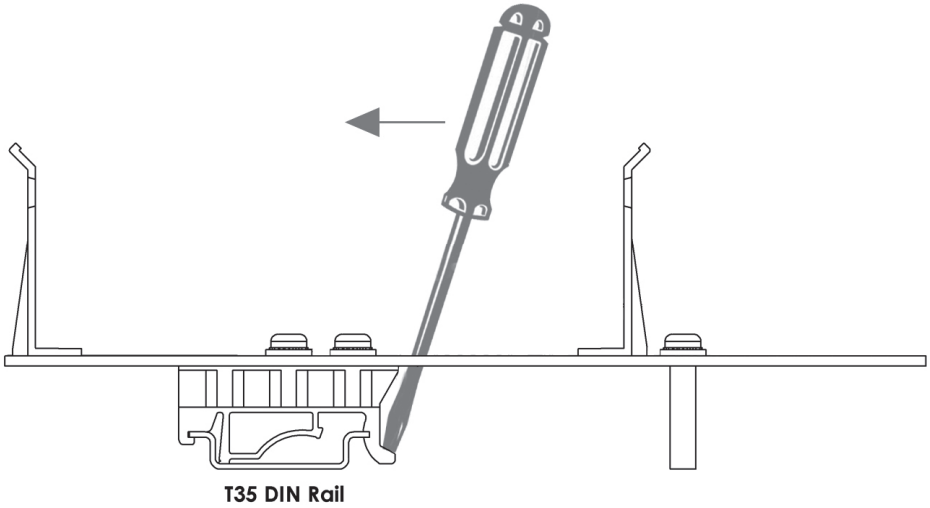

Ref. Nr	Q.ty	Description	Material
1	4	T35 Din Rail Adapter	PA
2	12	3.5 x 9.5 Self tapping screw	Stainless Steel
3	12	M3 External Tooth loch Washer	Stainless Steel
4	12	M3 Washer	Stainless Steel
5	4	6 c 20 Spacer	PA

Wall mounting overall dimensions for M4 self tapping screw:

Bottom view

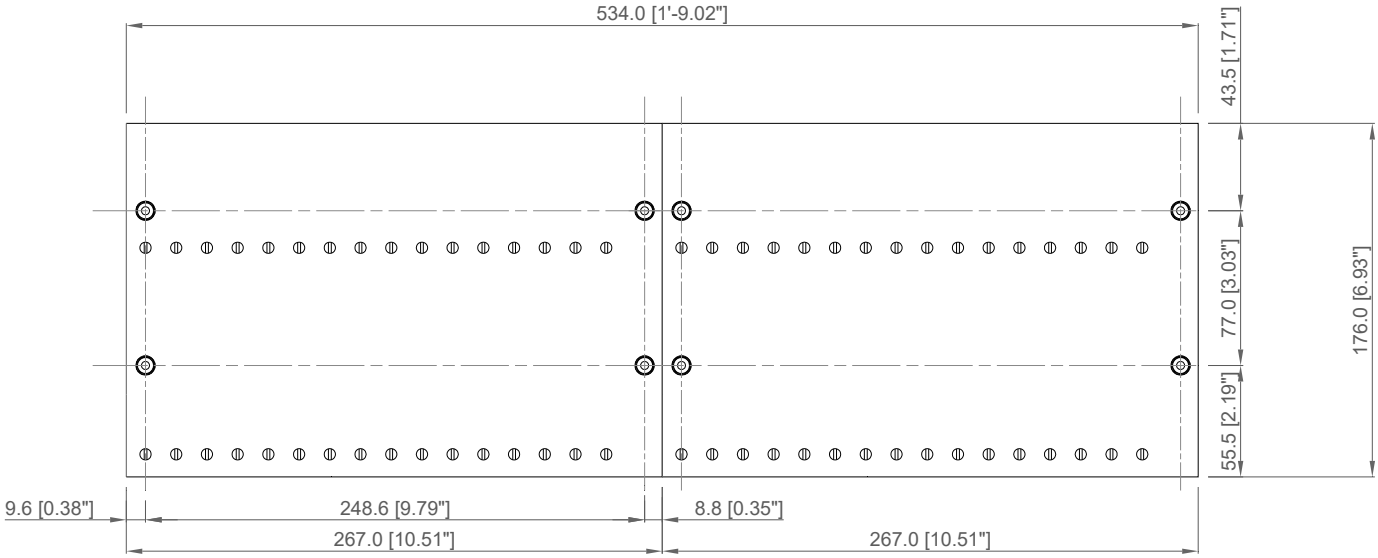

Side view

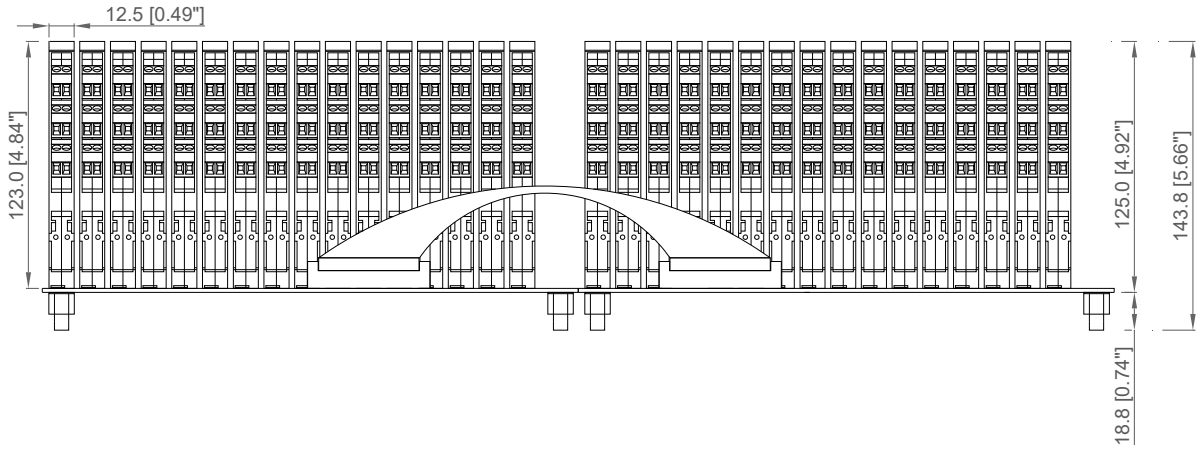

All dimensions are expressed in millimeters [inches]

Wall mounting features for M4 self tapping screw:

Mounting features kit TB-OPT-001 (2x)

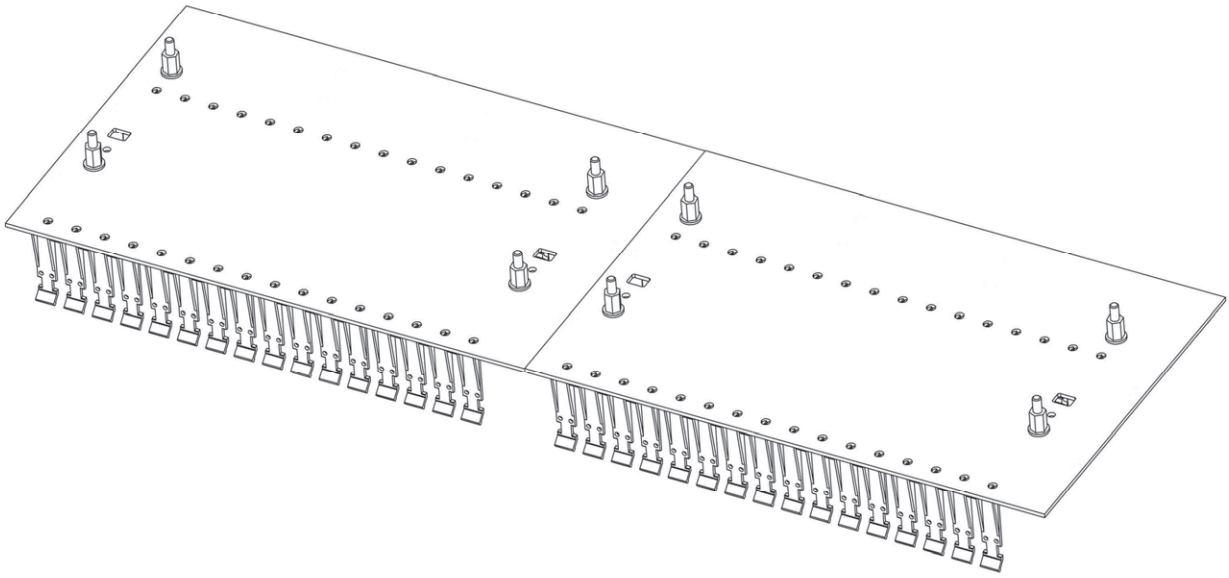

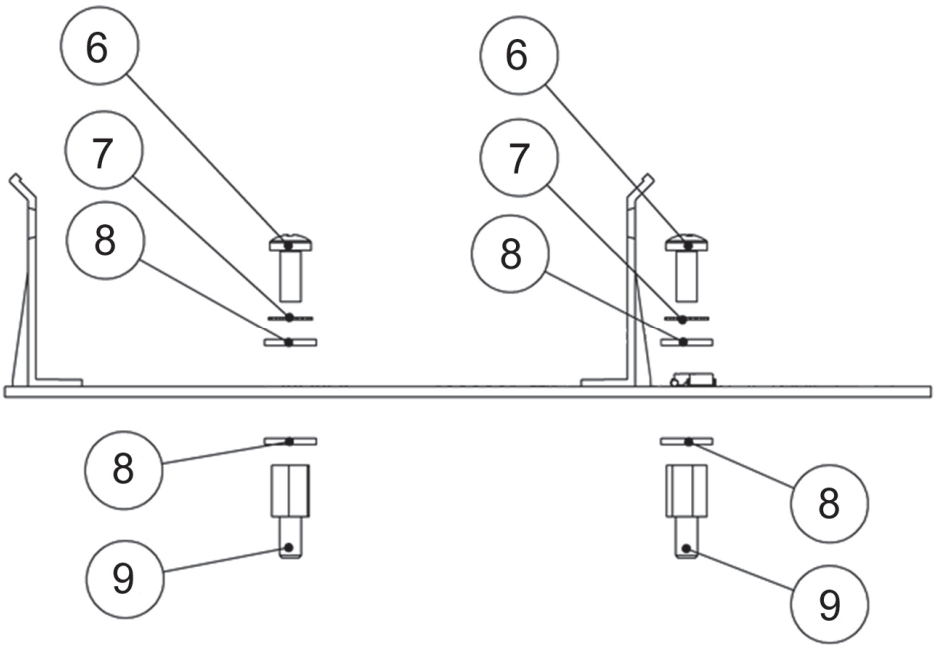

Ref. Nr	Q.ty	Description	Material
6	8	M4 x 8 Screw	Stainless Steel
7	8	M4 External Tooth lock Washer	Stainless Steel
8	16	M4 Washer	Stainless Steel
9	8	Self Tapping Spacer	NI - Plated Brass

Wall mounting overall dimensions for M4 thread screw:

Bottom view

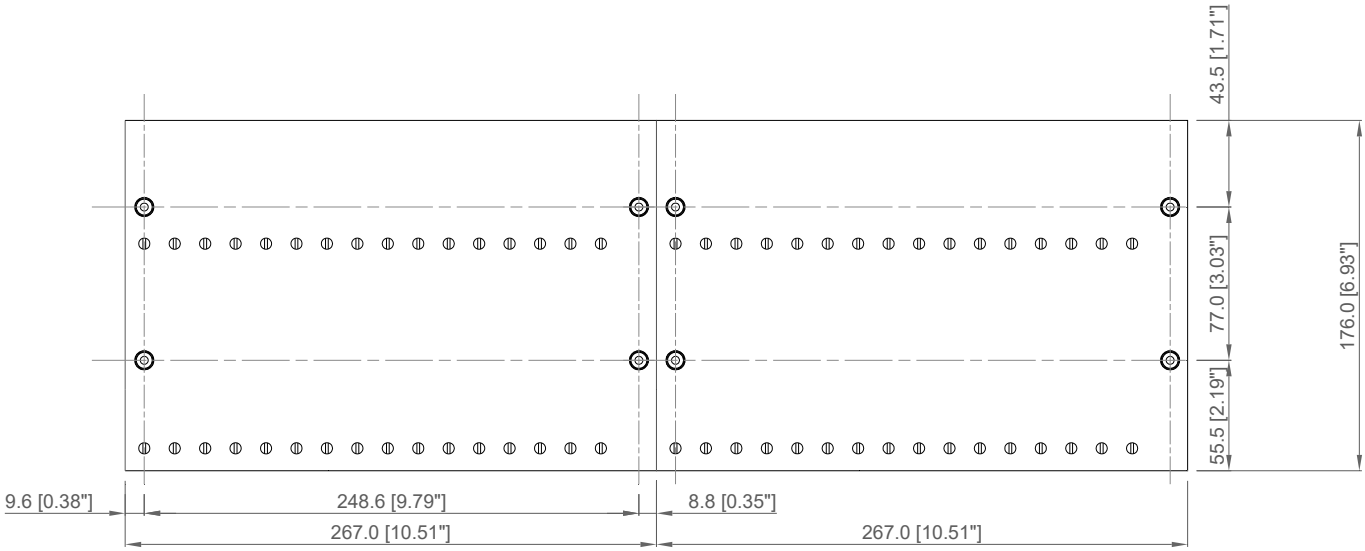

Side view

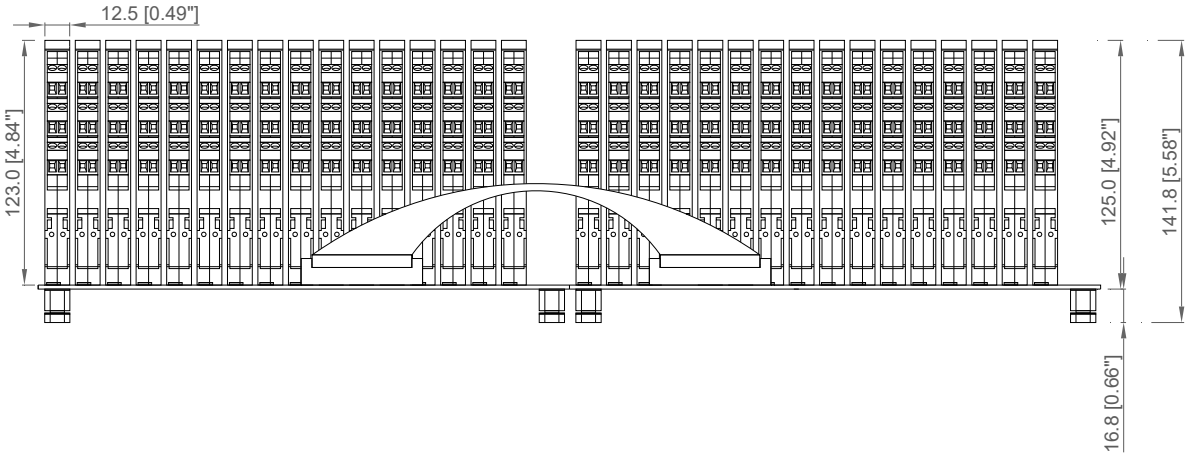

All dimensions are expressed in millimeters [inches]

Wall mounting features for M4 thread screw:

Mounting features kit TB-OPT-001 (2x)

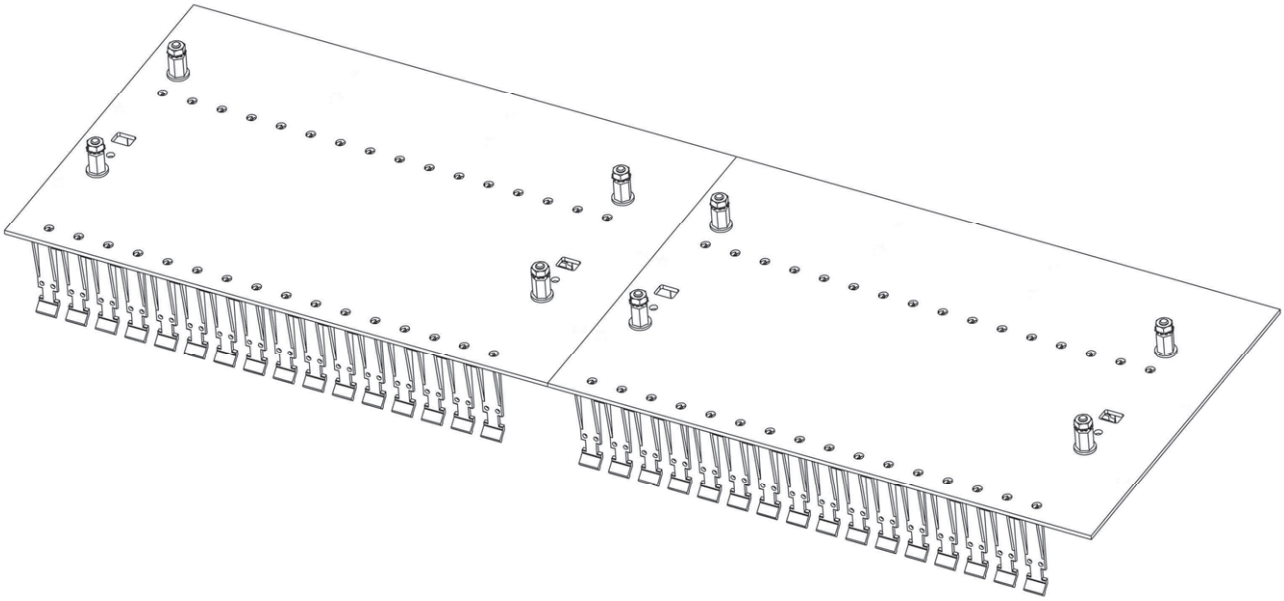

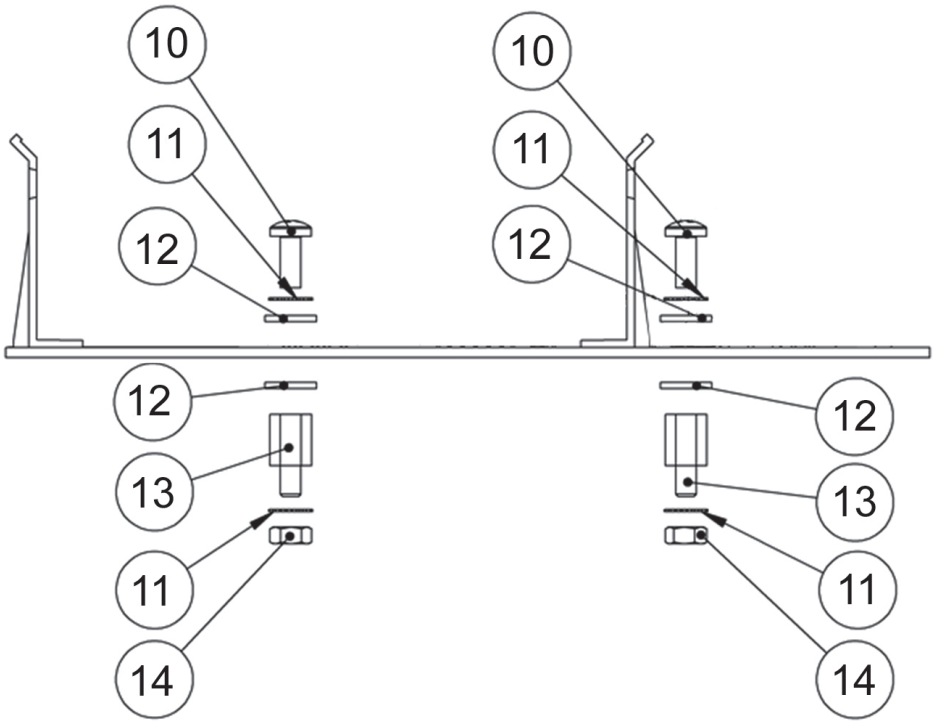

Ref. Nr	Q.ty	Description	Material
10	8	M4 x 8 Screw	Stainless Steel
11	16	M4 External Tooth lock Washer	Stainless Steel
12	16	M4 Washer	Stainless Steel
13	8	Threaded Spacer	NI - Plated Brass
14	8	M4 Nut	Stainless Steel

Connections table to Interface Card:

FIELD DEVICE	MODULE TYPE	MODULE FUNCTION	MODULE POSITION	INTERFACE CARD CHANNEL NUMBER	INTERFACE CARD CONNECTOR PIN NUMBER	INTERFACE CARD REDUNDANT CONNECTOR PIN NUMBER	NOTE
	D5031S, D5032S (Single channel)	Digital Input	1 (1st TB)	1	(-) 50 (CN1)	(-) 50 (CN2)	• Interface Card Connectors CN1, CN2: 50 poles male. For Interface Card channel number 1 to 16, the poles No. 12, 14, 16, 18 are Common poles, connected to GND of TB. For Interface Card channel number 17 to 32, the poles No. 11, 13, 15, 17 are Common poles, connected to GND of TB. The poles from No. 3 to No. 10 are not connected because not used. The poles No. 1 and No. 2 are connected together. • For each channel, the positive pole of signal is connected to +24 Vdc supply of TB.
			2 (1st TB)	2	(-) 48 (CN1)	(-) 48 (CN2)	
			3 (1st TB)	3	(-) 46 (CN1)	(-) 46 (CN2)	
			4 (1st TB)	4	(-) 44 (CN1)	(-) 44 (CN2)	
			5 (1st TB)	5	(-) 42 (CN1)	(-) 42 (CN2)	
			6 (1st TB)	6	(-) 40 (CN1)	(-) 40 (CN2)	
			7 (1st TB)	7	(-) 38 (CN1)	(-) 38 (CN2)	
			8 (1st TB)	8	(-) 36 (CN1)	(-) 36 (CN2)	
			9 (1st TB)	9	(-) 34 (CN1)	(-) 34 (CN2)	
			10 (1st TB)	10	(-) 32 (CN1)	(-) 32 (CN2)	
			11 (1st TB)	11	(-) 30 (CN1)	(-) 30 (CN2)	
			12 (1st TB)	12	(-) 28 (CN1)	(-) 28 (CN2)	
			13 (1st TB)	13	(-) 26 (CN1)	(-) 26 (CN2)	
			14 (1st TB)	14	(-) 24 (CN1)	(-) 24 (CN2)	
			15 (1st TB)	15	(-) 22 (CN1)	(-) 22 (CN2)	
			16 (1st TB)	16	(-) 20 (CN1)	(-) 20 (CN2)	
			17 (2nd TB)	17	(-) 49 (CN1)	(-) 49 (CN2)	
			18 (2nd TB)	18	(-) 47 (CN1)	(-) 47 (CN2)	
			19 (2nd TB)	19	(-) 45 (CN1)	(-) 45 (CN2)	
			20 (2nd TB)	20	(-) 43 (CN1)	(-) 43 (CN2)	
			21 (2nd TB)	21	(-) 41 (CN1)	(-) 41 (CN2)	
			22 (2nd TB)	22	(-) 39 (CN1)	(-) 39 (CN2)	
			23 (2nd TB)	23	(-) 37 (CN1)	(-) 37 (CN2)	
			24 (2nd TB)	24	(-) 35 (CN1)	(-) 35 (CN2)	
			25 (2nd TB)	25	(-) 33 (CN1)	(-) 33 (CN2)	
			26 (2nd TB)	26	(-) 31 (CN1)	(-) 31 (CN2)	
			27 (2nd TB)	27	(-) 29 (CN1)	(-) 29 (CN2)	
			28 (2nd TB)	28	(-) 27 (CN1)	(-) 27 (CN2)	
			29 (2nd TB)	29	(-) 25 (CN1)	(-) 25 (CN2)	
			30 (2nd TB)	30	(-) 23 (CN1)	(-) 23 (CN2)	
			31 (2nd TB)	31	(-) 21 (CN1)	(-) 21 (CN2)	
			32 (2nd TB)	32	(-) 19 (CN1)	(-) 19 (CN2)	

Termination Board supply connection details: